BALASANI 60cm BASIN & BALASANI PEDESTAL 2 or 3TH

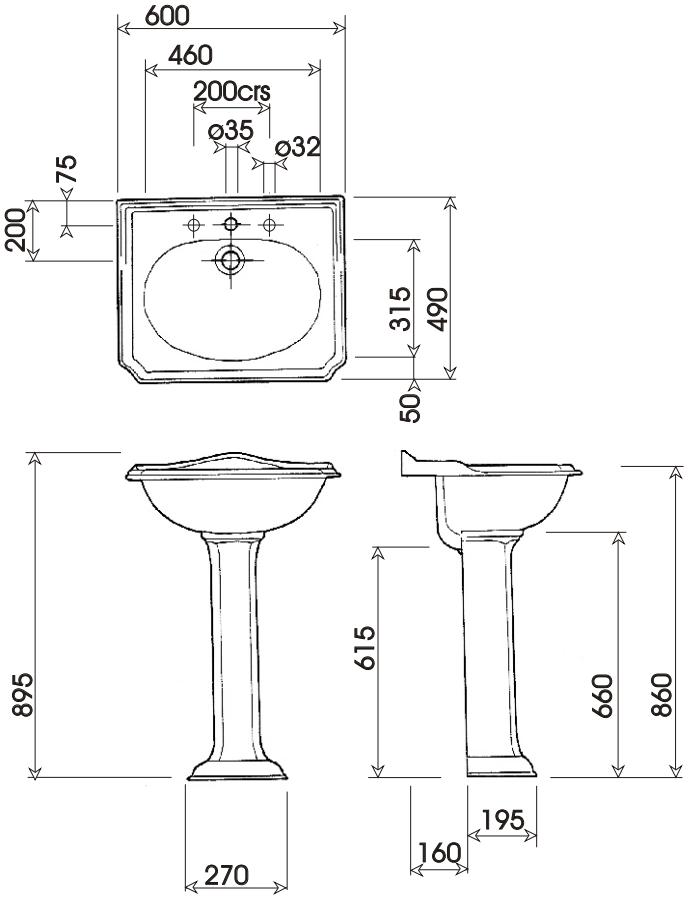

SCALE 1:20

5/02

R1. Taphole options changed to reflect BCS options.